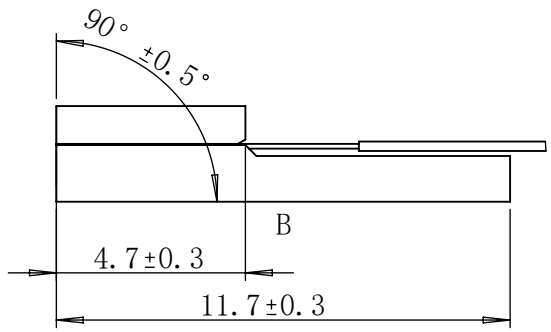

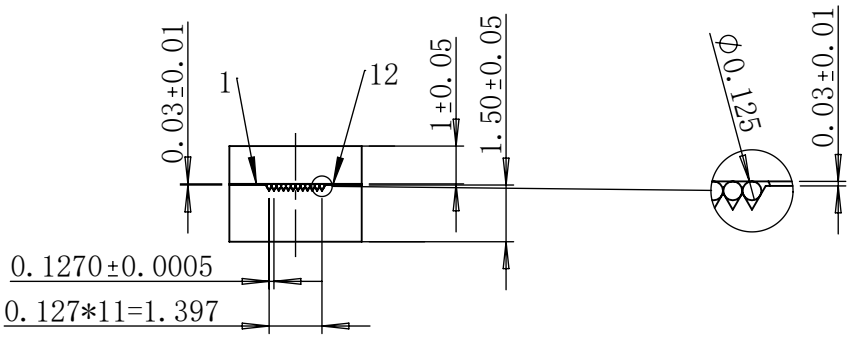

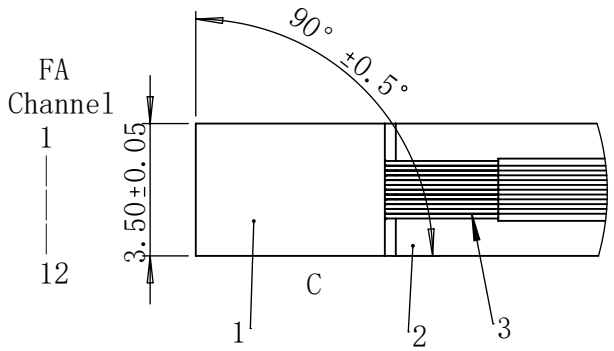

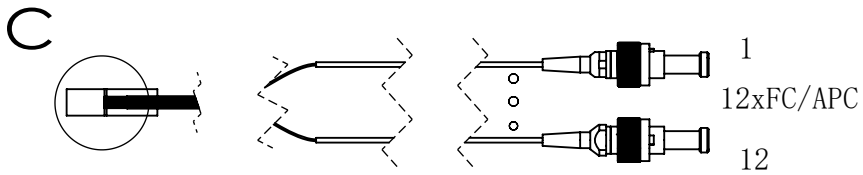

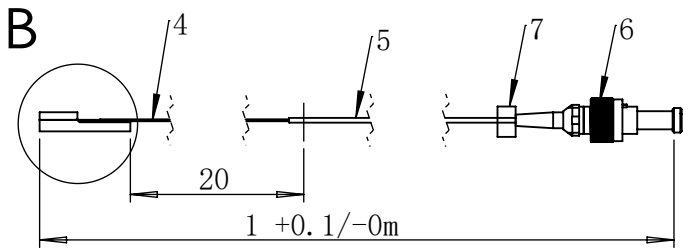

ITEM	PART	MATERIAL	DESCRIPTION	QTY
1	Array lid	Glass	3.5x5x1	1
2	Array base	Glass	12V-127P-3.5x12x5x1.5t	1
3	Cladding fiber	Glass	/	12
4	Bare fiber	Glass+Acrylate	Corning SMF-28 Ultra fiber	12
5	Fiber jacket	Hytrel	0.9mm white loose tube	12
6	Fiber Connector	Nickel plated brass	FC/APC	12
7	Wear cable marker	Polyethylene	Number：1-12	12

REV.	DESCRIPTION	DATE	REVISED
B	FA Width	2025/12/18	D2

DIMENSIONS ARE IN MM

X ±0.15
.X ±0.10
.XX ±0.05
ANGULAR ±0.5°

ALL MACHINED SURFACE TO BE 3.2

BREAK SHARP CORNERS MAX

	NAME	DATE
DRAWN	D2	2025/12/18
Q.A.	Q1	2025/12/18

PROPRIETARY AND CONFIDENTIAL

THE INFORMATION CONTAINED IN THIS DRAWING IS THE SOLE PROPERTY OF PHIX PHOTONICS ASSEMBLY. ANY REPRODUCTION IN PART OR AS A WHOLE WITHOUT THE WRITTEN PERMISSION OF PHIX PHOTONICS ASSEMBLY IS PROHIBITED.

PHOTONICS ASSEMBLY

TITLE:

KD-12ch 127P SMFA-FC_APC

SIZE	PART NO. or DWG. NO.	REV
A4	30110731 152912	B

SCALE:1:1 SHEET 1 OF 1

FORM NO: XXX REV: 1.0